RH TRUCKS
trucks, trailers and machinery

Scania R500 V8 6X2 EURO 5 + HIAB 377EP-4XS + REMOTE...
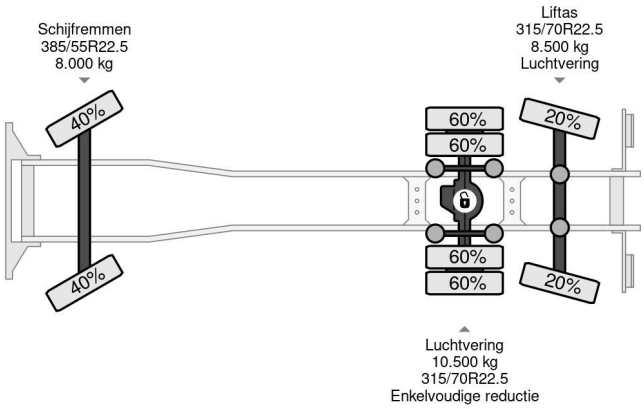
Referentienummer: SC203965